MAXIFLEX®

Gasket & Sealing Product

EDITION 2026 · MXF-HB-001

Gasket Technical Handbook

Selection, materials and dimensions of gaskets for pipe flanges in oil, gas and process industries.

- **Spiral-wound gaskets** ASME B16.20 · EN 1514-2
- **Ring-type joint gaskets R · RX · BX** ASME B16.20 · API Spec 6A
- **Kammprofile gaskets** ASME B16.20 · EN 1514-6
- **Metal-jacketed gaskets** EN 1514 / EN 12560 series
- **Non-asbestos and sheet gaskets** ASME B16.21 · EN 1514-1

SELECTION · MATERIALS · DIMENSIONS · STANDARDS

About this handbook

This handbook is a practical reference for engineers, buyers, inspectors and maintenance teams who specify, purchase and install MAXIFLEX gaskets for pipe flanges. It explains how each gasket type works, how to select materials, and gives the main dimensional data from the international standards that govern them.

All information has been reviewed against the editions of the standards current at the date of this edition (see Section 1). Where earlier publications referred to withdrawn standards or asbestos-based materials, these references have been removed or updated.

> **How to use the dimensional tables**
> All dimensions are in millimetres unless stated otherwise. Tables are reproduced for convenience and guidance. For ordering, inspection and acceptance, the current edition of the referenced standard and the purchase specification govern.

Contents

01	Applicable Standards	3
02	Gasket Selection	4
03	Non-Asbestos and Sheet Gaskets	6
04	Spiral-Wound Gaskets	9
05	Ring-Type Joint Gaskets	15
06	Kammprofile Gaskets	21
07	Metal-Jacketed Gaskets	23
08	Special Applications	25
09	Ordering Information	26

SECTION 01

Applicable Standards

12	2023	Add. 4
standards referenced	ASME B16.20 edition	API 6A 21st Edition

The following standards govern the design, materials, dimensions and marking of MAXIFLEX gaskets for pipe flanges. Unless a purchase order specifies an edition, MAXIFLEX gaskets are supplied to the current edition.

Table 1 Applicable standards and current editions

Standard	Title	Current edition	Applies to
ASME B16.20	Metallic Gaskets for Pipe Flanges	2023	RTJ, spiral-wound and grooved metal (Kammprofile) gaskets
ASME B16.21	Nonmetallic Flat Gaskets for Pipe Flanges	2021	Non-asbestos and other sheet gaskets
API Spec 6A	Specification for Wellhead and Tree Equipment	21st Ed. (2018) incl. Errata 1–6 and Addenda 1–4 (2024)	R, RX and BX ring gaskets
ISO 10423	Petroleum and natural gas industries – Wellhead and tree equipment	2022	International counterpart of API 6A
ASME B16.5	Pipe Flanges and Flanged Fittings, NPS ½ – NPS 24	2025	Mating flanges
ASME B16.47	Large Diameter Steel Flanges, NPS 26 – NPS 60	2025	Mating flanges, Series A and B
EN 1514-1	Gaskets for PN-designated flanges – Non-metallic flat gaskets	2024	Sheet gaskets for EN 1092 flanges
EN 1514-2	Gaskets for PN-designated flanges – Spiral wound gaskets	2014+A1:2021	SWG for EN 1092 flanges
EN 1514-6	Gaskets for PN-designated flanges – Covered serrated metal gaskets	Current edition	Kammprofile for EN 1092 flanges
ASTM F104	Classification System for Nonmetallic Gasket Materials	Current edition	Sheet material classification
ASME PCC-1	Pressure Boundary Bolted Flange Joint Assembly	2022	Assembly and bolting
ANSI/NACE MR0175 / ISO 15156	Materials for use in H_2S-containing environments	MR0175-2021 / ISO 15156:2020	Sour service, when specified

Table 2 Withdrawn, superseded or outdated references

Older reference	Current practice
API 601	Withdrawn. Metallic gaskets for ASME flanges are specified to ASME B16.20.
BS 3381	Withdrawn. Spiral-wound gaskets for Class-designated flanges: BS EN 12560 series; for PN-designated flanges: EN 1514-2.
"ANSI B16.5 / B16.20"	The standards are published by ASME and are designated ASME B16.5 and ASME B16.20.
Asbestos fillers and CAF sheet	Banned or restricted in most countries. Use flexible graphite, PTFE, mica or non-asbestos materials.
Metal-jacketed gaskets to ASME B16.20	The scope of ASME B16.20-2023 no longer lists metal-jacketed gaskets (they were listed in the 2017 edition). Specify the dimensional standard in the purchase order (see Section 7).

SECTION 02

Gasket Selection

10	150–2500	450 °C
selection criteria	ASME pressure classes	graphite limit in air

2.1 Selection criteria

A gasket must create and keep a seal for the whole life of the joint. The following factors should be checked for every application:

- **Fluid compatibility.** The gasket must not be attacked by the fluid at any operating condition, including cleaning and start-up fluids.
- **Temperature.** Check the maximum and minimum temperatures. Above about 100 °C most soft materials creep, which reduces gasket stress and bolt load.
- **Pressure.** Use the highest pressure the joint will see, which is often the test pressure and can exceed the flange rating at ambient temperature.
- **Thermal and pressure cycling.** Frequent cycles require a resilient gasket such as spiral-wound or Kammprofile.
- **Vibration and external loads.** The gasket and bolting must withstand mechanical shock and pipe loads.
- **Erosive media.** Suspended solids can erode soft materials; an inner ring or metallic gasket may be required.
- **Product contamination.** For potable water, food and pharmaceutical service, use materials with the required approvals.
- **Flange corrosion.** Austenitic stainless steel flanges are sensitive to chloride stress corrosion cracking; use gaskets with low leachable chloride and halogen content.
- **Joint integrity and emissions.** For toxic, flammable or emission-controlled service, choose a gasket with a larger safety margin and proven tightness.
- **Life-cycle cost.** The cost of a leak or unplanned shutdown far exceeds the cost of the gasket.

2.2 Indicative service limits

Table 3 Indicative service limits by gasket family

Gasket family	Typical flange classes	Typical temperature range	Comment
Rubber (NBR, EPDM, CR, FKM)	Class 150	–40 to +120 °C (grade dependent)	Water and low-pressure utilities
Compressed non-asbestos fibre (CNAF)	Class 150–300	Up to approx. 250–400 °C (grade dependent)	General utilities and process
PTFE sheet (filled or expanded)	Class 150–300	–200 to +260 °C	Chemical service
Flexible graphite sheet with SS insert	Class 150–600	–200 to +450 °C in air	Hydrocarbons, steam, thermal service
Spiral-wound	Class 150–2500	Limited by filler (Table 11)	Standard choice for oil & gas
Kammprofile	Class 150–2500	Limited by covering layer (Table 28)	Heat exchangers, high-integrity joints
Metal-jacketed	Heat exchanger / vessel joints	Limited by jacket and filler	Heat exchangers, large non-circular joints
Ring-type joint	Class 150–2500; API 2,000–20,000 psi	Limited by ring material	High pressure, wellhead equipment

Indicative values only. The actual limits depend on the specific material grade, flange type, bolting and service. Confirm with the MAXIFLEX product data sheet.

2.3 Pre-selection guidance

Where the piping specification does not already define the gasket, the following guidance may be used for preliminary selection.

Table 4 Pre-selection guidance

Service	Class	Temperature (°C)	Facing	Recommended gasket
General hydrocarbon, steam, condensate, boiler feed water	150–300	–196 to +450	RF	Flexible graphite sheet with SS insert, or spiral-wound 316L / flexible graphite
General utilities (non-hydrocarbon)	150–300	–40 to +250	RF / FF	Compressed non-asbestos fibre (CNAF)
General hydrocarbon, steam, boiler feed water	600–900	–196 to +450	RF	Spiral-wound 316L / flexible graphite with inner and outer ring
General hydrocarbon, steam, boiler feed water	1500–2500	Per flange material	RTJ	Ring-type joint, material per flange
Hydrogen	150–600	–196 to +450	RF	Spiral-wound with flexible graphite filler and inner ring
Hydrogen	900–2500	Per flange material	RTJ	Ring-type joint
Strong oxidisers, chemical service	150	–40 to +200	RF	PTFE (filled, expanded or envelope)
Strong oxidisers, chemical service	150–600	–40 to +200	RF	Spiral-wound with PTFE filler and inner ring
Above 450 °C in oxidising atmosphere	150–2500	Above +450	RF	Spiral-wound or Kammprofile with mica-based or other high-temperature filler

2.4 Vacuum service

- Coarse vacuum (760 to 1 torr): flat rubber or compressed non-asbestos fibre gaskets.
- High vacuum (1 to 10^{-7} torr): elastomer O-rings or moulded seals.
- Ultra-high vacuum (below 10^{-7} torr): specialised metal seals.

2.5 Low-temperature service

- Install gaskets completely dry and store them in a dry place before use.
- Apply the full bolt load at ambient temperature before cool-down.
- Austenitic stainless steel windings with flexible graphite or PTFE fillers are suitable for cryogenic service.

SECTION 03

Non-Asbestos and Sheet Gaskets

150–300	B16.21	RF / FF
typical ASME classes	ASME 2021 edition	ring or full-face

3.1 Description

Non-asbestos sheet gaskets are cut from compressed fibre, graphite, PTFE or elastomer sheet, usually by die-cutting or water-jet cutting. They are the simplest flange gaskets and are used for low- and medium-pressure service, mainly Class 150 and 300. ASME B16.21 specifies their dimensions, tolerances and marking for ASME flanges.

Two shapes are used: ring gaskets that fit inside the bolt circle of raised-face (RF) flanges, and full-face gaskets with bolt holes for flat-face (FF) flanges. Flat-face flanges of cast iron or other brittle materials must always use full-face gaskets.

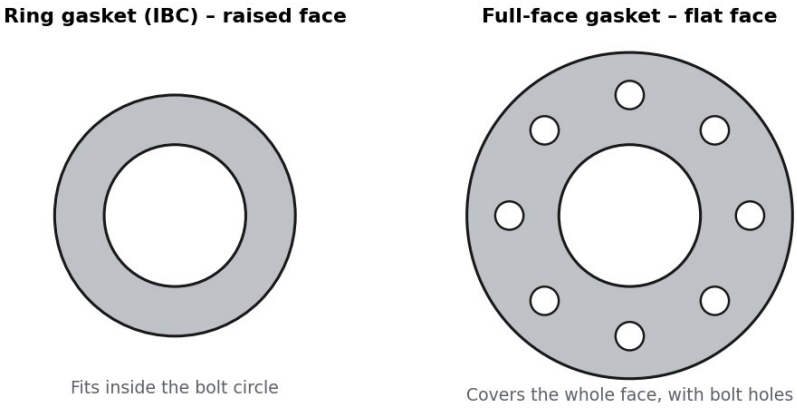

Figure 1 – Ring and full-face sheet gaskets

3.2 Sheet materials

Table 5 Common sheet gasket materials

Material	Typical use
Aramid fibre with NBR binder (CNAF)	General utilities, water, oils, fuels, low-pressure steam
Glass or inorganic fibre with binder	Steam and higher-temperature utilities
Carbon fibre reinforced	Steam, hot oils, higher temperatures
Flexible graphite, plain or with 316 / 316L insert	Hydrocarbons, steam, thermal cycling; tanged insert for strength
PTFE: filled (silica, barium sulphate, glass microspheres), expanded, or envelope	Aggressive chemicals, strong acids and alkalis
Elastomers: NBR, EPDM, CR (neoprene), FKM (Viton®), SBR	Water, air, oils and chemicals within elastomer limits
Mica and ceramic fibre	High-temperature, low-pressure service (exhausts, ducts)

Viton® is a trademark of its owner. Classify sheet materials according to ASTM F104 and confirm limits with the product data sheet.

3.3 Tanged graphite, utility and rubber gaskets

- **Tanged graphite.** Flexible graphite laminated on a perforated (tanged) stainless steel insert. The insert increases strength, handling and blow-out resistance. Wear gloves when handling. Plain graphite is not recommended for oxygenated seawater.
- **Utility gaskets.** For non-hydrocarbon utilities up to Class 300 and below 100 °C, reinforced nitrile-based sheet is a cost-effective choice.
- **Rubber gaskets.** Used for the least demanding services, such as low-pressure water, normally full-face on flat-face flanges. They are limited in temperature, pressure and chemical resistance and creep under load.

3.4 Dimensions to ASME B16.21

Table 6 Non-metallic ring gaskets for ASME B16.5 flanges (mm)

NPS	ID	Gasket outside diameter				
		Class 150	Class 300	Class 400	Class 600	Class 900
1/2	21	48	54	54	54	64
3/4	27	57	67	67	67	70
1	33	67	73	73	73	79
1-1/4	42	76	83	83	83	89
1-1/2	48	86	95	95	95	98
2	60	105	111	111	111	143
2-1/2	73	124	130	130	130	165
3	89	137	149	149	149	168
3-1/2	102	162	165	162	162	–
4	114	175	181	178	194	206
5	141	197	216	213	241	248
6	168	222	251	248	267	289
8	219	279	308	305	321	359
10	273	340	362	359	400	435
12	324	410	422	419	457	498
14	356	451	486	483	492	521
16	406	514	540	537	565	575
18	457	549	597	594	613	638
20	508	606	654	648	683	699
24	610	718	775	768	791	838

Table 7 Non-metallic ring gaskets for ASME B16.47 Series A flanges (mm)

NPS	ID	Gasket outside diameter			
		Class 150	Class 300	Class 400	Class 600
26	660	775	835	832	867
28	711	832	899	892	914
30	762	883	953	946	972
32	813	940	1006	1003	1022
34	864	991	1057	1054	1073
36	914	1048	1118	1118	1130
38	965	1111	1054	1073	1105
40	1016	1162	1114	1127	1156
42	1067	1219	1165	1178	1219
44	1118	1276	1219	1232	1270
46	1168	1327	1273	1289	1327
48	1219	1384	1324	1346	1391
50	1270	1435	1378	1403	1448
52	1321	1492	1429	1454	1499
54	1372	1549	1492	1518	1556
56	1422	1607	1543	1568	1613
58	1473	1664	1594	1619	1664
60	1524	1715	1645	1683	1721

Table 8 Non-metallic ring gaskets for ASME B16.47 Series B flanges (mm)

NPS	ID	Gasket outside diameter			
		Class 150	Class 300	Class 400	Class 600
26	660	725	772	746	765
28	711	776	826	800	819
30	762	827	886	857	879
32	813	881	940	911	933
34	864	935	994	962	997
36	914	987	1048	1022	1048
38	965	1045	1099	–	–
40	1016	1095	1149	–	–
42	1067	1146	1200	–	–
44	1118	1197	1251	–	–
46	1168	1256	1318	–	–
48	1219	1307	1368	–	–
50	1270	1357	1419	–	–
52	1321	1408	1470	–	–
54	1372	1464	1530	–	–
56	1422	1514	1594	–	–
58	1473	1580	1656	–	–
60	1524	1630	1705	–	–

Tolerances: outside diameter NPS 12 and smaller +0 / –1.5 mm, NPS 14 and larger +0 / –3.0 mm; inside diameter NPS 12 and smaller ±1.5 mm, NPS 14 and larger ±3.0 mm. "–" = size not listed for that class.

SECTION 04

Spiral-Wound Gaskets

150–2500	4.5 mm	B16.20
ASME pressure classes	winding, compresses to 3.2–3.4 mm	colour code and marking

4.1 Construction

A spiral-wound gasket is a semi-metallic gasket made by winding a V-profile metal strip together with a soft filler. The metal gives strength and resilience; the filler flows into the flange surface and creates the seal. Several plies of metal without filler are spot-welded at the start and end of the winding to keep it tight. The gasket withstands high pressure, high temperature and thermal cycling better than sheet gaskets, which makes it the standard choice for oil, gas and petrochemical service.

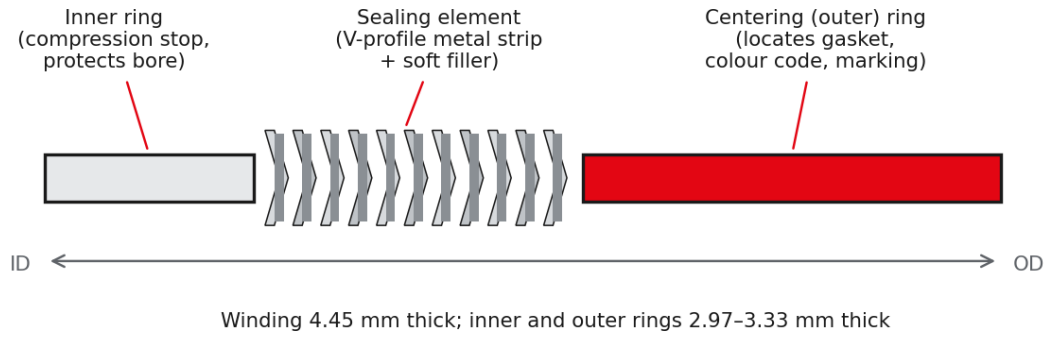

Figure 2 – Spiral-wound gasket with inner and centering rings

4.2 Styles

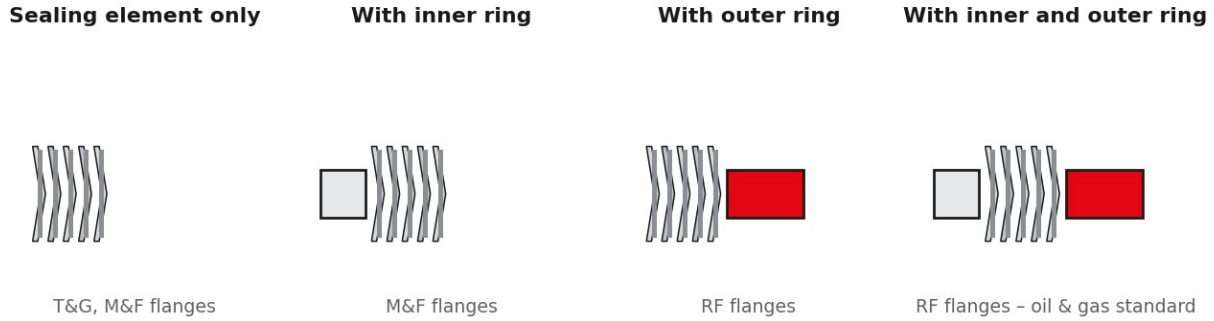

Figure 3 – Spiral-wound gasket styles

Table 9 Spiral-wound gasket styles

Style	Application
Sealing element only	Tongue-and-groove and male-and-female flanges, where the flange confines the gasket
Sealing element with inner ring	Male-and-female flanges where the bore must be protected
Sealing element with centering (outer) ring	Raised-face flanges where an inner ring is not required

Style	Application
Sealing element with inner and centering rings	Raised-face flanges; recommended for oil & gas and required by ASME B16.20 in the cases of Table 12
Special shapes	Heat exchangers, manways and non-circular joints, to drawing

4.3 Materials and colour code

ASME B16.20 identifies the winding metal by a solid colour on the outside edge of the centering ring, and the filler by coloured stripes at equal spacing around the ring.

Table 10 Winding metals and colour code (ASME B16.20)

Winding metal	UNS	EN No.	Abbreviation	Colour	
304 stainless steel	S30400	1.4301	304	Yellow	
316L stainless steel	S31603	1.4404	316L	Green	
317L stainless steel	S31703	1.4438	317L	Maroon	
321 stainless steel	S32100	1.4541	321	Turquoise	
347 stainless steel	S34700	1.4550	347	Blue	
Monel® 400	N04400	2.4360	MON	Orange	
Nickel 200	N02200	2.4066	NI	Red	
Titanium	R50400	3.7035	TI	Purple	
Alloy 20	N08020	2.4660	A-20	Black	
Hastelloy® B2	N10665	2.4617	HAST B	Brown	
Hastelloy® C276	N10276	2.4819	HAST C	Beige	
Inconel® 600	N06600	2.4816	INC 600	Gold	
Inconel® 625	N06625	2.4856	INC 625	Gold	
Incoloy® 800	N08800	1.4876	IN 800	White	
Incoloy® 825	N08825	2.4858	IN 825	White	
Carbon steel (centering ring)	–	–	CRS	Silver	

Table 11 Filler materials and colour code

Filler	Abbreviation	Stripe colour	Typical temperature range
Flexible graphite	F.G.	Gray	–200 to +450 °C in oxidising atmosphere; higher in steam or inert service
PTFE	PTFE	White	–200 to +260 °C
Mica-graphite	Manufacturer's designation	Pink	Oxidising service above 450 °C – consult MAXIFLEX
Ceramic	CER	Light green	Very high temperature, low tightness requirement – consult MAXIFLEX

Monel®, Hastelloy®, Inconel® and Incoloy® are trademarks of their respective owners. Colours of other alloys: see ASME B16.20.

Inner and centering rings

The inner ring is normally the same material as the winding, because it is exposed to the process fluid. The centering ring does not contact the fluid and is normally painted carbon steel; stainless steel centering rings are used for corrosive atmospheres or low temperatures.

Table 12 Inner ring requirements (ASME B16.20)

Condition	Inner ring
PTFE-filled gaskets, all sizes and classes	Required
Class 900, NPS 24 and larger	Required
Class 1500, NPS 12 and larger	Required
Class 2500, NPS 4 and larger	Required
All other cases with flexible graphite filler	Recommended by MAXIFLEX for oil & gas service

The inner ring prevents the winding from buckling into the bore, acts as an additional compression stop, reduces turbulence and protects the winding from erosion and corrosion. Its ID should be flush with the flange bore. An inner ring increases the bolt load needed to seat the gasket.

4.4 Marking

Each gasket is marked on the centering ring with: manufacturer's name or trademark, NPS, pressure class, winding metal, filler, inner ring material (if fitted), centering ring material if not carbon steel, flange series for ASME B16.47 flanges, ASME B16.20, and the lot number for traceability.

Example MAXIFLEX 4 600 316L F.G. I.R. 316L B16.20 LOT SW-260923-01

4.5 Thickness

Table 13 Spiral-wound gasket thickness and recommended compressed thickness

Sealing element thickness	Recommended compressed thickness
3.2 mm	2.3 – 2.5 mm
4.5 mm (ASME B16.20 standard)	3.2 – 3.4 mm
6.4 mm	4.6 – 4.9 mm
7.2 mm	4.8 – 5.0 mm

4.6 Dimensions to ASME B16.20 (ASME B16.5 flanges)

d1 = inner ring ID; d2 = sealing element ID; d3 = sealing element OD; d4 = centering ring OD. Sealing element 4.45 mm thick; inner and centering rings 2.97–3.33 mm thick.

Table 14 Spiral-wound gaskets for ASME B16.5 Class 150 flanges (mm)

NPS	Inner ring	Sealing element		Centering ring
	d1	d2	d3	d4
1/2	14.2	19.1	31.8	47.8
3/4	20.6	25.4	39.6	57.2
1	26.9	31.8	47.8	66.8
1-1/4	38.1	47.8	60.5	76.2
1-1/2	44.5	54.1	69.9	85.9
2	55.6	69.9	85.9	104.9
2-1/2	66.5	82.6	98.6	124
3	81	101.6	120.7	136.7
4	106.4	127	149.4	174.8
5	131.8	155.7	177.8	196.9
6	157.2	182.6	209.6	222.3
8	215.9	233.4	263.7	279.4
10	268.2	287.3	317.5	339.9
12	317.5	339.9	374.7	409.7
14	349.3	371.6	406.4	450.9
16	400.1	422.4	463.6	514.4
18	449.3	474.7	527.1	549.4
20	500.1	525.5	577.9	606.6

NPS	Inner ring	Sealing element		Centering ring
	d1	d2	d3	d4
24	603.3	628.7	685.8	717.6

Table 15 Spiral-wound gaskets for ASME B16.5 Class 300 flanges (mm)

NPS	Inner ring	Sealing element		Centering ring
	d1	d2	d3	d4
1/2	14.2	19.1	31.8	54.1
3/4	20.6	25.4	39.6	66.8
1	26.9	31.8	47.8	73.2
1-1/4	38.1	47.8	60.5	82.6
1-1/2	44.5	54.1	69.9	95.3
2	55.6	69.9	85.9	111.3
2-1/2	66.5	82.6	98.6	130.3
3	81	101.6	120.7	149.4
4	106.4	127	149.4	181.1
5	131.8	155.7	177.8	215.9
6	157.2	182.6	209.6	251
8	215.9	233.4	263.7	308.1
10	268.2	287.3	317.5	362
12	317.5	339.9	374.7	422.4
14	349.3	371.6	406.4	485.9
16	400.1	422.4	463.6	539.8
18	449.3	474.7	527.1	596.9
20	500.1	525.5	577.9	654.1
24	603.3	628.7	685.8	774.7

Table 16 Spiral-wound gaskets for ASME B16.5 Class 400 flanges (mm)

NPS	Inner ring	Sealing element		Centering ring
	d1	d2	d3	d4
1/2	14.2	19.1	31.8	54.1
3/4	20.6	25.4	39.6	66.8
1	26.9	31.8	47.8	73.2
1-1/4	38.1	47.8	60.5	82.6
1-1/2	44.5	54.1	69.9	95.3
2	55.6	69.9	85.9	111.3
2-1/2	66.5	82.6	98.6	130.3
3	81	101.6	120.7	149.4
4	102.6	120.7	149.4	177.8
5	128.3	147.6	177.8	212.9
6	154.9	174.8	209.6	247.7
8	205.7	225.6	263.7	304.8
10	255.3	274.6	317.5	358.9
12	307.3	327.2	374.7	419.1
14	342.9	362	406.4	482.6
16	389.9	412.8	463.6	536.7
18	438.2	469.9	527.1	593.9
20	489	520.7	577.9	647.7
24	590.6	628.7	685.8	768.4

Table 17 Spiral-wound gaskets for ASME B16.5 Class 600 flanges (mm)

NPS	Inner ring	Sealing element		Centering ring
	d1	d2	d3	d4
1/2	14.2	19.1	31.8	54.1
3/4	20.6	25.4	39.6	66.8
1	26.9	31.8	47.8	73.2
1-1/4	38.1	47.8	60.5	82.6
1-1/2	44.5	54.1	69.9	95.3
2	55.6	69.9	85.9	111.3

NPS	Inner ring	Sealing element		Centering ring
	d1	d2	d3	d4
2-1/2	66.5	82.6	98.6	130.3
3	78.7	101.6	120.7	149.4
4	102.6	120.7	149.4	193.8
5	128.3	147.6	177.8	241.3
6	154.9	174.8	209.6	266.7
8	205.7	225.6	263.7	320.8
10	255.3	274.6	317.5	400.1
12	307.3	327.2	374.7	457.2
14	342.9	362	406.4	492.3
16	389.9	412.8	463.6	565.2
18	438.2	469.9	527.1	612.9
20	489	520.7	577.9	682.8
24	590.6	628.7	685.8	790.7

Table 18 Spiral-wound gaskets for ASME B16.5 Class 900 flanges (mm)

NPS	Inner ring	Sealing element		Centering ring
	d1	d2	d3	d4
1/2	14.2	19.1	31.8	63.5
3/4	20.6	25.4	39.6	69.9
1	26.9	31.8	47.8	79.5
1-1/4	33.3	39.6	60.5	88.9
1-1/2	41.4	47.8	69.9	98.6
2	52.3	58.7	85.9	143
2-1/2	63.5	69.9	98.6	165.1
3	78.7	95.3	120.7	168.4
4	102.6	120.7	149.4	206.5
5	128.3	147.6	177.8	247.7
6	154.9	174.8	209.6	289.1
8	196.9	222.3	257.3	358.9
10	246.1	276.4	311.2	435.1
12	292.1	323.9	368.3	498.6
14	320.8	355.6	400.1	520.7
16	374.7	412.8	457.2	574.8
18	425.5	463.6	520.7	638.3
20	482.6	520.7	571.5	698.5
24	590.6	628.7	679.5	838.2

Table 19 Spiral-wound gaskets for ASME B16.5 Class 1500 flanges (mm)

NPS	Inner ring	Sealing element		Centering ring
	d1	d2	d3	d4
1/2	14.2	19.1	31.8	63.5
3/4	20.6	25.4	39.6	69.9
1	26.9	31.8	47.8	79.5
1-1/4	33.3	39.6	60.5	88.9
1-1/2	41.4	47.8	69.9	98.6
2	52.3	58.7	85.9	143
2-1/2	63.5	69.9	98.6	165.1
3	78.7	92.2	120.7	174.8
4	97.8	117.6	149.4	209.6
5	124.5	143	177.8	254
6	147.3	171.5	209.6	282.7
8	196.9	215.9	257.3	352.6
10	246.1	266.7	311.2	435.1
12	292.1	323.9	368.3	520.7
14	320.8	362	400.1	577.9
16	374.7	406.4	457.2	641.4
18	425.5	463.6	520.7	704.9

NPS	Inner ring	Sealing element		Centering ring
	d1	d2	d3	d4
20	476.3	514.4	571.5	755.7
24	577.9	616	679.5	901.7

Table 20 Spiral-wound gaskets for ASME B16.5 Class 2500 flanges (mm)

NPS	Inner ring	Sealing element		Centering ring
	d1	d2	d3	d4
1/2	14.2	19.1	31.8	69.9
3/4	20.6	25.4	39.6	76.2
1	26.9	31.8	47.8	85.9
1-1/4	33.3	39.6	60.5	104.9
1-1/2	41.4	47.8	69.9	117.6
2	52.3	58.7	85.9	146
2-1/2	63.5	69.9	98.6	168.4
3	78.7	92.2	120.7	196.9
4	97.8	117.6	149.4	235
5	124.5	143	177.8	279.4
6	147.3	171.5	209.6	317.5
8	196.9	215.9	257.3	387.4
10	246.1	270	311.2	476.3
12	292.1	317.5	368.3	549.4

Tolerances: sealing element OD ±0.8 mm for NPS ½–8, +1.5 / –0.8 mm for NPS 10–24. There are no Class 400 flanges NPS ½–3 (use Class 600) or Class 900 flanges NPS ½–2½ (use Class 1500); Class 2500 flanges stop at NPS 12. Dimensions for ASME B16.47 Series A and B flanges are available on request.

SECTION 05

Ring-Type Joint Gaskets

R · RX · BX	20,000 psi	Softer
ring types	up to, API 6BX	ring than groove, always

5.1 Principle

A ring-type joint (RTJ) gasket is a solid metal ring that fits into machined grooves in the two mating flanges. When the bolts are tightened, the ring – which is softer than the flange – deforms plastically into the grooves and forms a metal-to-metal seal. RTJ gaskets are used for high pressure and high temperature service on piping, valves, vessels and wellhead equipment.

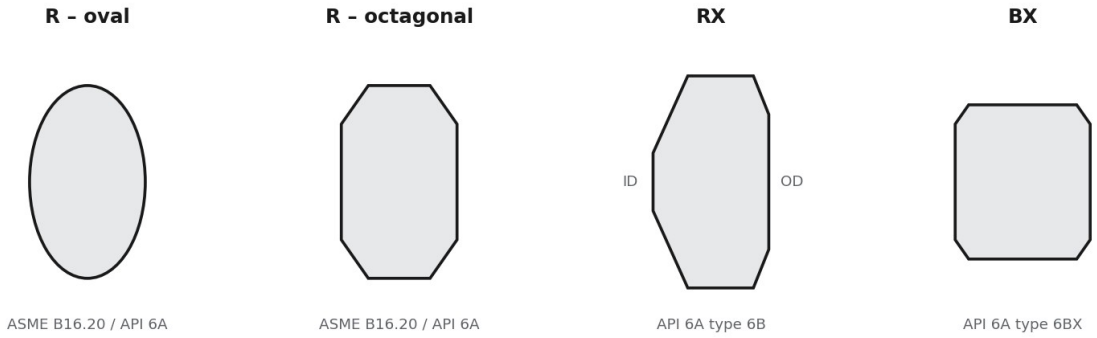

Schematic cross-sections, not to scale. RX and BX are pressure-energized designs.

Figure 4 – Ring-type joint gasket styles

5.2 Types

Type	Flanges	Description
R oval	ASME B16.5, B16.47 Series A; API 6A type 6B	Original design. Fits both round-bottom and flat-bottom grooves.
R octagonal	ASME B16.5, B16.47 Series A; API 6A type 6B	Higher sealing efficiency than oval. Flat-bottom grooves only. The most common type.
RX	API 6A type 6B	Pressure-energized octagonal design that fits the same groove as the R ring of the same number. It is taller, so the flange gap is larger. Some sizes have a pressure-passage hole.
BX	API 6A type 6BX	Pressure-energized ring for 6BX flanges from 2,000 to 20,000 psi. Designed for face-to-face make-up. All BX rings have a pressure-passage hole. Not interchangeable with R or RX.

R and RX rings to ASME B16.20 and API 6A of the same ring number are dimensionally interchangeable. API 6A adds material, marking and traceability requirements for wellhead equipment. AX, VX and similar rings for subsea hub connectors are outside both standards and are supplied to the connector manufacturer's drawing.

5.3 Materials and hardness

The ring must always be softer than the groove, so that the ring and not the flange deforms. A ring harder than the groove will damage the flange and may not seal. Choose the ring material to suit the flange material and the fluid.

Table 21 Ring materials, identification and maximum hardness (ASME B16.20)

Material	Identification	UNS	EN No.	Max. HBW	Max. HRBW
Soft iron	D	–	1.1003	90	56
Low-carbon steel	S4	–	1.0038	120	68

Material	Identification	UNS	EN No.	Max. HBW	Max. HRBW
4–6 % Cr, ½ % Mo	F5	K41545	1.7362	130	72
Type 410 stainless steel	S410	S41000	1.4006	170	86
Type 304 stainless steel	S304	S30400	1.4301	160	83
Type 316 stainless steel	S316	S31600	1.4401	160	83
Type 347 stainless steel	S347	S34700	1.4550	160	83

Table 22 Maximum hardness of ring gaskets (API 6A)

Material	Max. hardness
Soft iron	56 HRBW
Carbon and low-alloy steel	68 HRBW
Stainless steel	83 HRBW
Nickel alloy UNS N08825	92 HRBW

Table 23 Other ring materials available on request

Material	UNS	EN No.	Typical use
316L stainless steel	S31603	1.4404	Low-carbon grade for welded or corrosive service
Duplex 2205 (F51)	S31803	1.4462	Chloride-containing and offshore service
Super duplex (F53 / F55)	S32750 / S32760	1.4410 / 1.4501	Seawater and severe chloride service
6Mo (F44)	S31254	1.4547	Seawater service
Alloy 625	N06625	2.4856	Sour and high-temperature service
Alloy 825	N08825	2.4858	Sour service, API 6A
Alloy C276	N10276	2.4819	Strongly corrosive media
Titanium Grade 2	R50400	3.7035	Seawater and chlorides

Hardness of these materials is specified in the purchase order and must be lower than the groove hardness. Material for sour service to ANSI/NACE MR0175 / ISO 15156 when specified.

5.4 Identification

- **Type:** R (oval or octagonal), RX or BX, as stated in the piping specification.
- **Ring number:** from the flange marking or Table 25; for example, R46 fits NPS 6 Class 1500.
- **Material:** identification code per Table 21, for example D (soft iron) or S316.
- **Standard:** ASME B16.20 or API 6A.
- **Marking:** manufacturer, ring number, material and standard are marked on the outside diameter of the ring; API 6A rings also carry traceability marking.

5.5 Type R ring dimensions

P = pitch diameter; A = width; B = height of oval ring; H = height of octagonal ring; C = width of flat of octagonal ring; R1 = radius of octagonal ring.

Table 24 Type R ring dimensions (mm)

Ring No.	P	A	B (oval)	H (oct.)	C (oct.)	R1
R11	34.14	6.35	11.2	9.7	4.32	1.5
R12	39.7	7.95	14.2	12.7	5.23	1.5
R13	42.88	7.95	14.2	12.7	5.23	1.5
R14	44.45	7.95	14.2	12.7	5.23	1.5
R15	47.63	7.95	14.2	12.7	5.23	1.5
R16	50.8	7.95	14.2	12.7	5.23	1.5

Ring No.	P	A	B (oval)	H (oct.)	C (oct.)	R1
R17	57.15	7.95	14.2	12.7	5.23	1.5
R18	60.33	7.95	14.2	12.7	5.23	1.5
R19	65.1	7.95	14.2	12.7	5.23	1.5
R20	68.28	7.95	14.2	12.7	5.23	1.5
R21	72.24	11.13	17.5	16	7.75	1.5
R22	82.55	7.95	14.2	12.7	5.23	1.5
R23	82.55	11.13	17.5	16	7.75	1.5
R24	95.25	11.13	17.5	16	7.75	1.5
R25	101.6	7.95	14.2	12.7	5.23	1.5
R26	101.6	11.13	17.5	16	7.75	1.5
R27	107.95	11.13	17.5	16	7.75	1.5
R28	111.13	12.7	19.1	17.5	8.66	1.5
R29	114.3	7.95	14.2	12.7	5.23	1.5
R30	117.48	11.13	17.5	16	7.75	1.5
R31	123.83	11.13	17.5	16	7.75	1.5
R32	127	12.7	19.1	17.5	8.66	1.5
R33	131.78	7.95	14.2	12.7	5.23	1.5
R34	131.78	11.13	17.5	16	7.75	1.5
R35	136.53	11.13	17.5	16	7.75	1.5
R36	149.23	7.95	14.2	12.7	5.23	1.5
R37	149.23	11.13	17.5	16	7.75	1.5
R38	157.18	15.88	22.4	20.6	10.49	1.5
R39	161.93	11.13	17.5	16	7.75	1.5
R40	171.45	7.95	14.2	12.7	5.23	1.5
R41	180.98	11.13	17.5	16	7.75	1.5
R42	190.5	19.05	25.4	23.9	12.32	1.5
R43	193.68	7.95	14.2	12.7	5.23	1.5
R44	193.68	11.13	17.5	16	7.75	1.5
R45	211.15	11.13	17.5	16	7.75	1.5
R46	211.15	12.7	19.1	17.5	8.66	1.5
R47	228.6	19.05	25.4	23.9	12.32	1.5
R48	247.65	7.95	14.2	12.7	5.23	1.5
R49	269.88	11.13	17.5	16	7.75	1.5
R50	269.88	15.88	22.4	20.6	10.49	1.5
R51	279.4	22.23	28.7	26.9	14.81	1.5
R52	304.8	7.95	14.2	12.7	5.23	1.5
R53	323.85	11.13	17.5	16	7.75	1.5
R54	323.85	15.88	22.4	20.6	10.49	1.5
R55	342.9	28.58	36.6	35.1	19.81	2.3
R56	381	7.95	14.2	12.7	5.23	1.5
R57	381	11.13	17.5	16	7.75	1.5
R58	381	22.23	28.7	26.9	14.81	1.5
R59	396.88	7.95	14.2	12.7	5.23	1.5
R60	406.4	31.75	39.6	38.1	22.33	2.3
R61	419.1	11.13	17.5	16	7.75	1.5
R62	419.1	15.88	22.4	20.6	10.49	1.5
R63	419.1	25.4	33.3	31.8	17.3	2.3
R64	454.03	7.95	14.2	12.7	5.23	1.5
R65	469.9	11.13	17.5	16	7.75	1.5
R66	469.9	15.88	22.4	20.6	10.49	1.5
R67	469.9	28.58	36.6	35.1	19.81	2.3
R68	517.53	7.95	14.2	12.7	5.23	1.5
R69	533.4	11.13	17.5	16	7.75	1.5
R70	533.4	19.05	25.4	23.9	12.32	1.5
R71	533.4	28.58	36.6	35.1	19.81	2.3
R72	558.8	7.95	14.2	12.7	5.23	1.5
R73	584.2	12.7	19.1	17.5	8.66	1.5
R74	584.2	19.05	25.4	23.9	12.32	1.5

Ring No.	P	A	B (oval)	H (oct.)	C (oct.)	R1
R75	584.2	31.75	39.6	38.1	22.33	2.3
R76	673.1	7.95	14.2	12.7	5.23	1.5
R77	692.15	15.88	22.4	20.6	10.49	1.5
R78	692.15	25.4	33.3	31.8	17.3	2.3
R79	692.15	34.93	44.5	41.4	24.82	2.3
R93	749.3	19.05	–	23.9	12.32	1.5
R94	800.1	19.05	–	23.9	12.32	1.5
R95	857.25	19.05	–	23.9	12.32	1.5
R96	914.4	22.23	–	26.9	14.81	1.5
R97	965.2	22.23	–	26.9	14.81	1.5
R98	1022.35	22.23	–	26.9	14.81	1.5
R100	749.3	28.58	–	35.1	19.81	2.3
R101	800.1	31.75	–	38.1	22.33	2.3
R102	857.25	31.75	–	38.1	22.33	2.3
R103	914.4	31.75	–	38.1	22.33	2.3
R104	965.2	34.93	–	41.4	24.82	2.3
R105	1022.35	34.93	–	41.4	24.82	2.3

"–" = oval ring not standardised for that number.

5.6 Type R ring selection

Table 25 **Type R ring numbers for ASME B16.5 and B16.47 Series A flanges**

NPS	ASME B16.5					ASME B16.47 Series A	
	Class 150	Class 300 / 600	Class 900	Class 1500	Class 2500	Class 300 / 600	Class 900
1/2	–	R11	R12	R12	R13	–	–
3/4	–	R13	R14	R14	R16	–	–
1	R15	R16	R16	R16	R18	–	–
1-1/4	R17	R18	R18	R18	R21	–	–
1-1/2	R19	R20	R20	R20	R23	–	–
2	R22	R23	R24	R24	R26	–	–
2-1/2	R25	R26	R27	R27	R28	–	–
3	R29	R31	R31	R35	R32	–	–
3-1/2	R33	R34	–	–	–	–	–
4	R36	R37	R37	R39	R38	–	–
5	R40	R41	R41	R44	R42	–	–
6	R43	R45	R45	R46	R47	–	–
8	R48	R49	R49	R50	R51	–	–
10	R52	R53	R53	R54	R55	–	–
12	R56	R57	R57	R58	R60	–	–
14	R59	R61	R62	R63	–	–	–
16	R64	R65	R66	R67	–	–	–
18	R68	R69	R70	R71	–	–	–
20	R72	R73	R74	R75	–	–	–
22	R80	R81	–	–	–	–	–
24	R76	R77	R78	R79	–	–	–
26	–	–	–	–	–	R93	R100
28	–	–	–	–	–	R94	R101
30	–	–	–	–	–	R95	R102
32	–	–	–	–	–	R96	R103
34	–	–	–	–	–	R97	R104
36	–	–	–	–	–	R98	R105

NPS 3 Class 300/600 lapped-joint flanges use ring R30. NPS 22 is included in ASME B16.5 from the 2016 edition. ASME B16.47 Series A does not include RTJ Class 150.

5.7 Type RX ring dimensions

Table 26 Type RX ring dimensions (mm)

Ring No.	Outside diameter	Height	Width
RX20	76.2	19.05	8.74
RX23	93.27	25.4	11.91
RX24	105.97	25.4	11.91
RX25	109.55	19.05	8.74
RX26	111.91	25.4	11.91
RX27	118.26	25.4	11.91
RX31	134.54	25.4	11.91
RX35	147.24	25.4	11.91
RX37	159.94	25.4	11.91
RX39	172.64	25.4	11.91
RX41	191.69	25.4	11.91
RX44	204.39	25.4	11.91
RX45	221.84	25.4	11.91
RX46	222.25	28.58	13.49
RX47	245.26	41.28	19.84
RX49	280.59	25.4	11.91
RX50	283.36	31.75	16.66
RX53	334.57	25.4	11.91
RX54	337.34	31.75	16.66
RX57	391.72	25.4	11.91
RX63	441.73	50.8	27
RX65	480.62	25.4	11.91
RX66	–	31.75	16.66
RX69	544.12	25.4	11.91
RX70	550.06	41.28	19.84
RX73	596.11	31.75	13.49
RX74	600.86	41.28	19.84
RX82	67.87	25.4	11.91
RX84	74.22	25.4	11.91
RX85	90.09	25.4	13.49
RX86	103.58	28.58	15.09
RX87	113.11	28.58	15.09
RX88	139.29	31.75	17.48
RX89	129.77	31.75	18.26
RX90	174.63	44.45	19.84
RX91	286.94	45.24	30.18
RX99	245.67	25.4	11.91
RX201	51.46	11.3	5.74
RX205	62.31	11.1	5.56
RX210	97.64	19.05	9.53
RX215	140.89	25.4	11.91

RX66 outside diameter: confirm against API 6A before ordering. Select the ring number from the flange marking or the API 6A flange tables.

5.8 Type BX ring dimensions

Table 27 Type BX ring dimensions (mm) and API 6BX flange application

Ring No.	Nominal size (in)	Rated working pressure (psi)	Outside diameter	Height	Width
BX150	1 11/16	10,000, 15,000	72.19	9.3	9.3
BX151	1 13/16	10,000, 15,000, 20,000	76.4	9.63	9.63
BX152	2 1/16	10,000, 15,000, 20,000	84.68	10.24	10.24
BX153	2 9/16	10,000, 15,000, 20,000	100.94	11.38	11.38
BX154	3 1/16	10,000, 15,000, 20,000	116.84	12.4	12.4
BX155	4 1/16	10,000, 15,000, 20,000	147.96	14.22	14.22

Ring No.	Nominal size (in)	Rated working pressure (psi)	Outside diameter	Height	Width
BX156	7 1/16	10,000, 15,000, 20,000	237.92	18.62	18.62
BX157	9	10,000, 15,000, 20,000	294.46	20.98	20.98
BX158	11	10,000, 15,000, 20,000	352.04	23.14	23.14
BX159	13 5/8	10,000, 15,000, 20,000	426.72	25.7	25.7
BX160	13 5/8	5,000	402.59	23.83	13.74
BX161	16 3/4	5,000	491.41	28.07	16.21
BX162	16 3/4	5,000, 10,000, 15,000	475.49	14.22	14.22
BX163	18 3/4	5,000	556.16	30.1	17.37
BX164	18 3/4	10,000, 15,000	570.56	30.1	24.59
BX165	21 1/4	5,000	624.71	32.03	18.49
BX166	21 1/4	10,000	640.03	32.03	26.14
BX167	26 3/4	2,000	759.36	35.86	13.11
BX168	26 3/4	3,000	765.25	35.86	16.05
BX169	5 1/8	10,000	173.51	15.85	12.93
BX170	6 5/8	10,000, 15,000	218.03	14.22	14.22
BX171	8 9/16	10,000, 15,000	267.44	14.22	14.22
BX172	11 5/32	10,000, 15,000	333.07	14.22	14.22
BX303	30	2,000, 3,000	852.75	37.95	16.97

SECTION 06

Kammprofile Gaskets

0.1–0.2 mm	150–2500	3.2–6.3 µm
compressed sealing layer	ASME pressure classes	flange finish Ra

6.1 Description

A Kammprofile gasket (also called a camprofile or grooved metal gasket with covering layers) consists of a solid metal core with concentric serrations on both faces, covered with thin layers of a soft sealing material such as flexible graphite, PTFE or mica. Under load the soft layers flow into the serrations, giving a seal with a very thin compressed layer (typically 0.1–0.2 mm) and high stability. ASME B16.20 covers Kammprofile gaskets for ASME flanges; EN 1514-6 covers them for PN-designated flanges.

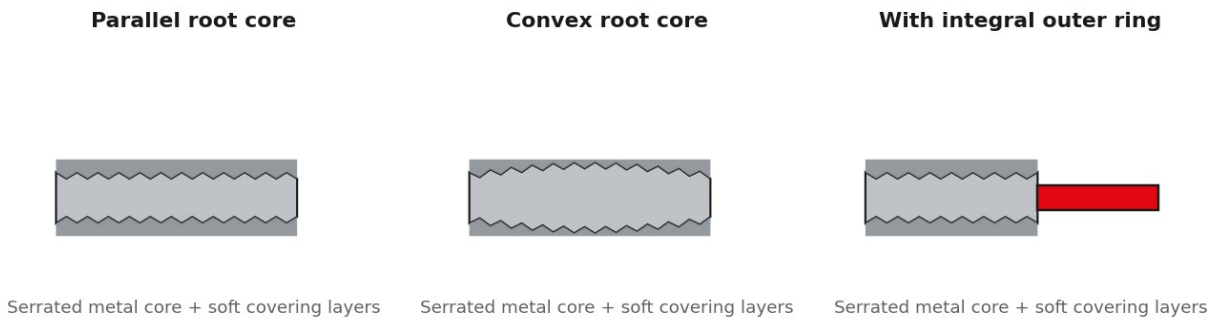

Figure 5 – Kammprofile gasket designs

6.2 Advantages

- High tightness with low seating stress; suitable for Class 150 to 2500 when correctly specified.
- Less sensitive than spiral-wound gaskets to scatter in bolt load and to thermal and pressure cycling.
- The covering layers protect the flange faces from damage.
- Suitable for standard flange finishes of 3.2–6.3 µm Ra (125–250 µin).
- Suitable for large diameters and for heat exchanger joints, including pass-partition designs.
- The metal core of large or exotic-alloy gaskets can be refurbished by the manufacturer with new covering layers. A used gasket must never be re-installed as removed.

6.3 Construction and materials

Core thickness is typically 2–4 mm, with 3 mm the most common for petrochemical service. Cores are available with parallel or convex roots, and with an integral or loose outer ring for centering in the bolts. The core material should match the piping material; see Table 10 for common metals.

Table 28 Covering layer materials

Covering layer	Typical temperature range	Typical application
Flexible graphite	–200 to +450 °C in air; higher in steam or inert service	Hydrocarbons, steam, most chemicals
PTFE	–200 to +260 °C	Aggressive chemicals
Mica-based	Above 450 °C in oxidising atmosphere – consult MAXIFLEX	High-temperature oxidising service
Silver	Up to approx. 750 °C	Special high-temperature applications

6.4 Dimensions to ASME B16.20 (ASME B16.5 flanges)

d1 = core ID; d2 = core OD (sealing face); d3 = centering ring OD.

Table 29 Kammprofile gaskets for ASME B16.5 Class 150–400 flanges (mm)

NPS	d1	d2	d3		
			Class 150	Class 300	Class 400
1/2	23	33.3	44.4	50.8	50.8
3/4	28.6	39.7	53.9	63.5	63.5
1	36.5	47.6	63.5	69.8	69.8
1-1/4	44.4	60.3	73	79.4	79.4
1-1/2	52.4	69.8	82.5	92.1	92.1
2	69.8	88.9	101.6	108	108
2-1/2	82.5	101.6	120.6	127	127
3	98.4	123.8	133.4	146.1	146.1
3-1/2	111.1	136.5	158.8	161.9	158.7
4	123.8	154	171.5	177.8	174.6
5	150.8	182.6	193.7	212.7	209.5
6	177.8	212.7	219.1	247.7	244.5
8	228.6	266.7	276.2	304.8	301.6
10	282.6	320.7	336.5	358.8	355.6
12	339.7	377.8	406.4	419.1	415.9
14	371.5	409.6	447.7	482.6	479.4
16	422.3	466.7	511.2	536.6	533.4
18	479.4	530.2	546.1	593.7	590.5
20	530.2	581	603.2	650.9	644.5
24	631.8	682.6	714.4	771.5	765.2

Table 30 Kammprofile gaskets for ASME B16.5 Class 600–2500 flanges (mm)

NPS	d1	d2	d3			
			Class 600	Class 900	Class 1500	Class 2500
1/2	23	33.3	50.8	60.3	60.3	66.7
3/4	28.6	39.7	63.5	66.7	66.7	73
1	36.5	47.6	69.8	76.2	76.2	82.5
1-1/4	44.4	60.3	79.4	85.7	85.7	101.6
1-1/2	52.4	69.8	92.1	95.2	95.2	114.3
2	69.8	88.9	108	139.7	139.7	142.8
2-1/2	82.5	101.6	127	161.9	161.9	165.1
3	98.4	123.8	146.1	165.1	171.5	193.7
3-1/2	111.1	136.5	158.7	–	–	–
4	123.8	154	190.5	203.2	206.4	231.7
5	150.8	182.6	238.1	244.5	250.8	276.2
6	177.8	212.7	263.5	285.8	279.4	314.3
8	228.6	266.7	317.5	355.6	349.3	384.1
10	282.6	320.7	396.9	431.8	431.8	473
12	339.7	377.8	454	495.3	517.5	546.1
14	371.5	409.6	488.9	517.5	574.7	–
16	422.3	466.7	561.9	571.5	638.1	–
18	479.4	530.2	609.6	635	701.7	–
20	530.2	581	679.5	695.3	752.4	–
24	631.8	682.6	787.4	835	898.5	–

"–" = size not available in that class.

SECTION 07

Metal-Jacketed Gaskets

Heat exchangers	Single · Double	PO
main application	jacket designs	states the dimensions

7.1 Description

A metal-jacketed gasket consists of a soft, resilient filler enclosed fully or partly in a thin metal jacket. The filler provides conformability; the jacket resists pressure, temperature and the fluid. Metal-jacketed gaskets are used mainly on heat exchangers, pressure vessels, pumps and valves, including large and non-circular joints. They need smooth flange faces and relatively high seating stress.

Standards
The scope of ASME B16.20-2023 no longer lists metal-jacketed gaskets. Specify the dimensions in the purchase order: to the heat exchanger or vessel drawing, to the EN 1514 / EN 12560 series, or to the ring dimensions in Tables 32 and 33, which correspond to those formerly given in ASME B16.20 (2017 and earlier editions).

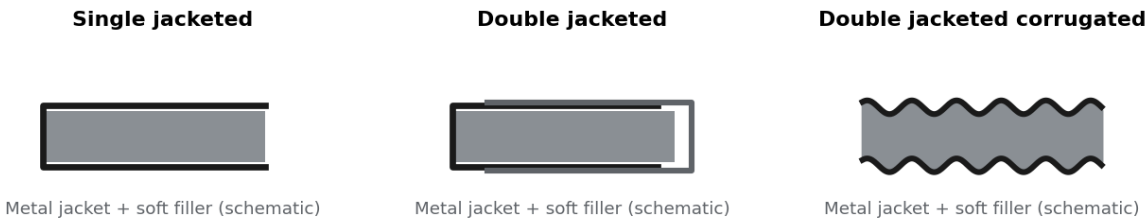

Figure 6 – Metal-jacketed gasket types

7.2 Types

Type	Typical application
Single jacketed, soft filler	Narrow flanges and covers; filler partly enclosed
Double jacketed, soft filler	Most common type; heat exchangers, high temperature and pressure, corrosive service
Double jacketed corrugated	Reduced contact area and lower seating stress; uneven flanges
Corrugated metal, no filler	Valves and small recess gaps
Corrugated metal with graphite facing	Lower seating stress with improved tightness

7.3 Materials

Table 31 Jacket materials

Jacket material	Typical temperature range
Carbon steel / soft iron	–60 to +450 °C
304 / 304L, 316 / 316L, 321 stainless steel	–196 to +550 °C
Monel® 400	–60 to +500 °C
Inconel® 600	–60 to +600 °C
Aluminium	–250 to +300 °C
Copper	–250 to +400 °C

Fillers: flexible graphite, PTFE, non-asbestos mineral fibre or ceramic fibre. The service temperature is limited by the lower of the jacket and filler limits.

7.4 Dimensions

Table 32 Metal-jacketed gaskets for ASME B16.5 Class 150–400 flanges (mm)

NPS	d1 (ID)	d2 (OD)		
		Class 150	Class 300	Class 400
1/2	23.8	44.5	50.8	50.8
3/4	31.8	54	63.5	63.5
1	36.5	63.5	69.9	69.9
1-1/4	46	73	79.4	79.4
1-1/2	52.4	82.6	92.1	92.1
2	73.2	101.6	108	108
2-1/2	85.9	120.6	127	127
3	107.8	133.4	146.1	146.1
4	131.8	171.5	177.8	174.7
5	152.4	193.8	212.8	209.5
6	190.5	219.1	247.7	244.5
8	238.3	276.3	304.8	301.7
10	285.8	336.6	358.8	355.6
12	342.9	406.4	419.1	415.9
14	374.7	447.7	482.6	479.5
16	425.5	511.2	536.6	533.4
18	489	546.1	593.7	590.6
20	533.4	603.3	650.9	644.5
24	641.4	714.4	771.6	765.3

Table 33 Metal-jacketed gaskets for ASME B16.5 Class 600–2500 flanges (mm)

NPS	d1 (ID)	d2 (OD)			
		Class 600	Class 900	Class 1500	Class 2500
1/2	23.8	50.8	60.4	60.4	66.8
3/4	31.8	63.5	66.7	66.7	73.1
1	36.5	69.9	76.2	76.2	82.5
1-1/4	46	79.4	85.8	85.8	101.6
1-1/2	52.4	92.1	95.3	95.3	114.3
2	73.2	108	139.7	139.7	143
2-1/2	85.9	127	161.9	161.9	165.1
3	107.8	146.1	165.1	171.5	193.8
4	131.8	190.5	203.2	206.5	231.9
5	152.4	238.2	244.6	250.9	276.3
6	190.5	263.6	285.8	279.4	314.5
8	238.3	317.5	355.6	349.3	384.3
10	285.8	396.9	431.8	431.8	473.2
12	342.9	454.1	495.3	517.6	546.1
14	374.7	489	517.6	574.7	–
16	425.5	562	571.5	638.2	–
18	489	609.6	635	701.8	–
20	533.4	679.5	695.5	752.5	–
24	641.4	787.4	835.1	898.6	–

Dimensions correspond to ASME B16.20-2017 and earlier. "–" = size not available in that class.

SECTION 08

Special Applications

Lined pipe	Low chloride	MR0175
low bolt loads	for stainless flanges	sour service

8.1 Lined pipework

Lined pipework is used for aggressive or high-purity fluids, so the gasket must be at least as resistant as the lining and must not contaminate the fluid. Linings are often soft or fragile and some have uneven surfaces, so bolt loads must be kept low. The gasket must also resist cleaning fluids.

Lining	Recommended gasket
Rubber	Soft rubber gasket; a steel or ebonite spacer may be used to prevent over-compression
Plastic (PTFE, PFA, PP)	Usually none; a gasket is needed for dissimilar connections, uneven linings or dip-applied linings such as PVC
Lead	Creep-resistant PTFE, or PTFE envelope with soft rubber insert
Glass	PTFE envelope or expanded PTFE

8.2 Stainless steel flanges

Austenitic stainless steel flanges are sensitive to chloride stress corrosion cracking. Use gaskets with low leachable chloride and halogen content, such as high-purity flexible graphite, and low-chloride marking inks.

8.3 Sour service

For H_2S-containing environments, metallic components shall comply with ANSI/NACE MR0175 / ISO 15156 when specified by the purchaser. State this requirement in the purchase order.

SECTION 09

Ordering Information

Type
style and size

Material
and certificate

Standard
and edition

To make sure the correct gasket is supplied, please state the following in the enquiry or purchase order.

Gasket type	Information required
All gaskets	Quantity; standard and edition (if required); flange standard (ASME B16.5, B16.47 Series A/B, API 6A, EN 1092); NPS and class or API size and pressure; certificate type (EN 10204 3.1); special requirements (NACE MR0175, PMI, third-party inspection)
Spiral-wound	Style (inner and outer ring); winding metal; filler; inner ring material; centering ring material; thickness if not 4.5 mm
Ring-type joint	Type (R oval, R octagonal, RX, BX); ring number; material; maximum hardness
Kammprofile	Core material; covering layer; core style (parallel or convex root); integral or loose outer ring; dimensions or drawing
Metal-jacketed	Type; jacket and filler materials; ID, OD and thickness or drawing; for heat exchangers: number and dimensions of pass-partition bars and radii
Sheet gaskets	Material grade; thickness; ring or full-face; drilling for full-face gaskets

Related MAXIFLEX documents
Gasket User Manual – installation, bolting and storage (KL-MAN-GSK-001)
Gasket Marking & Traceability Procedure (KLT-PMK-GSK-01)
Packaging Procedure (KL-PKG-GSK-001)
Applicable Standards – Metallic Gaskets for Pipe Flanges (KL-STD-GSK-001)

MAXIFLEX®
Gasket & Sealing Product

MAXIFLEX® is a brand of Khong Lieng Trading Co. Pte. Ltd.
Distributed in Thailand by Khong Lieng (Thailand) Co., Ltd.
139/87-88 Moo 1, Samet Sub-district, Muang Chonburi District, Chonburi 20000, Thailand
Tel: 089-775-4832 · E-mail: sales@khonglieng.co.th